FULLY AUTOMATIC

AUTO ANTENNA

ITEM # 70133

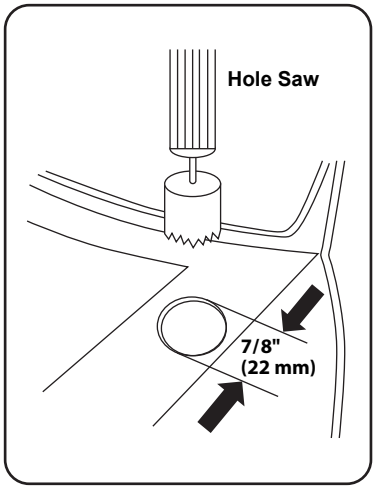

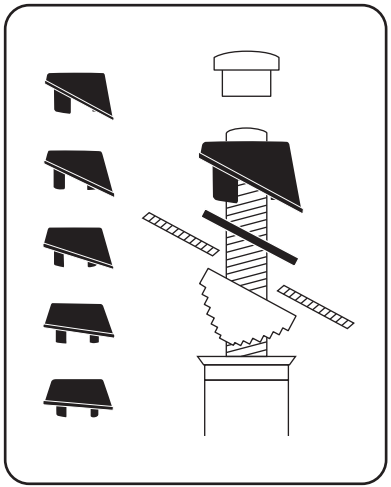

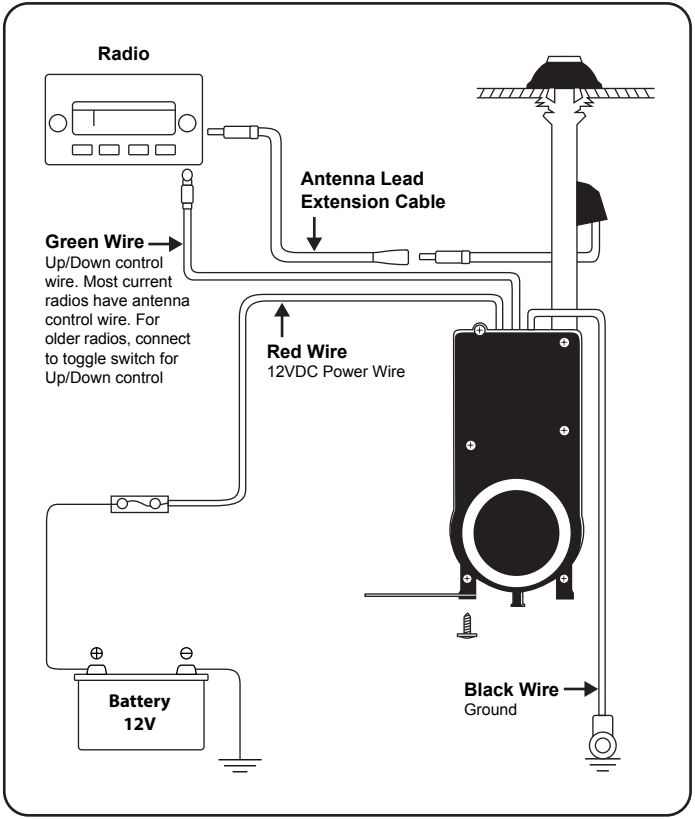

050218 V1